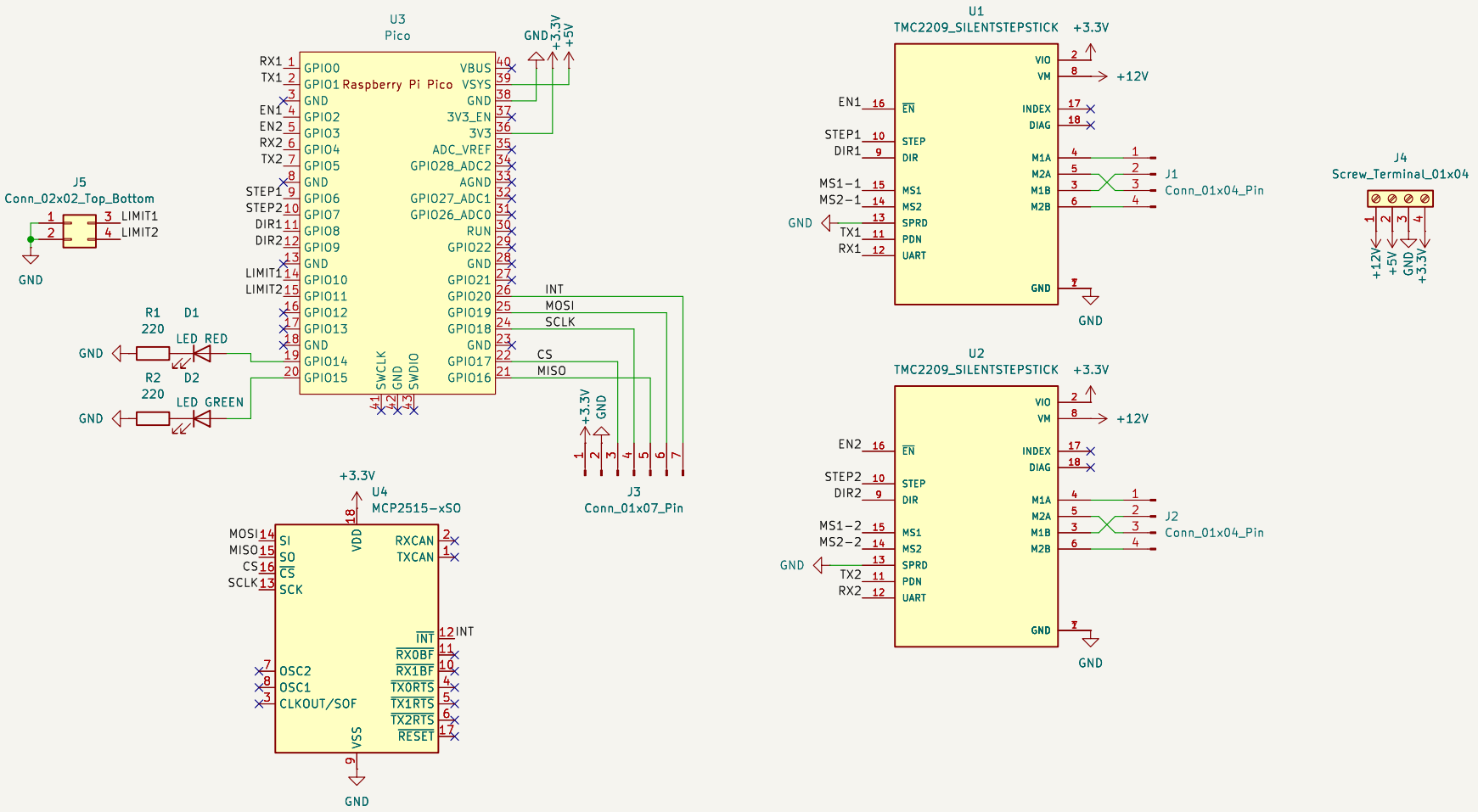

Author: AlexanderHD27
Technology: THT

(Produced)

Sheet: /
File: motor-driver-breakout-v2.kicad_sch

Title: Motor Driver Breakout v2

Size: A4	Date: 2024-09-10	**Rev: v0.2**
KiCad E.D.A. 8.0.4		Id: 1/1